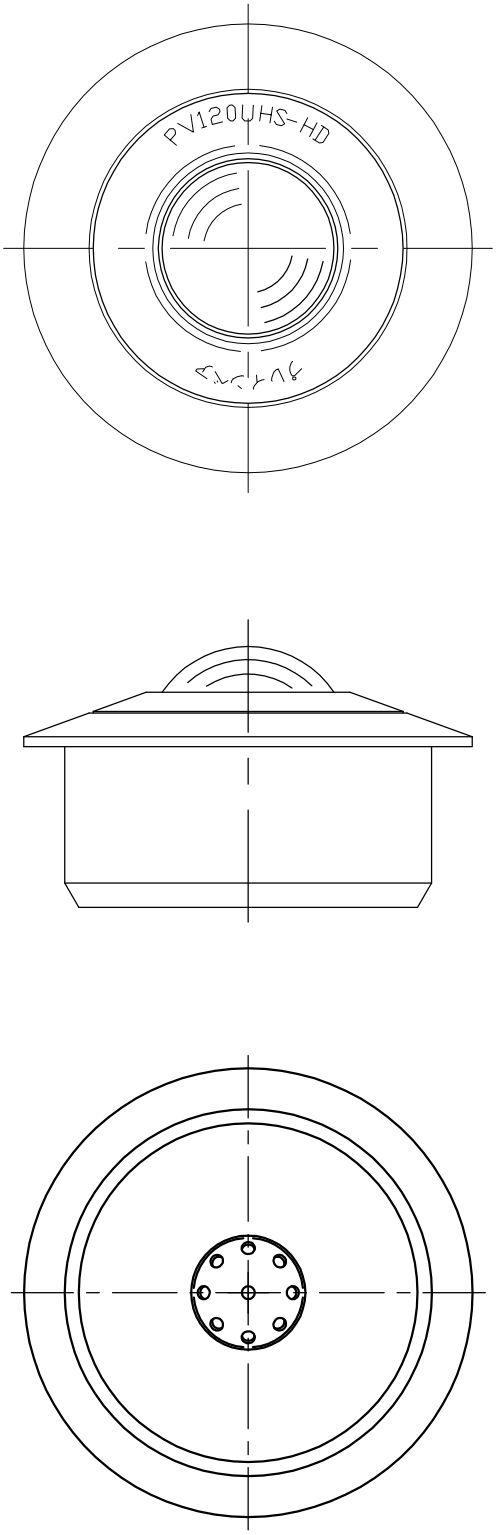
PV120UHS-HD